Differential pressure gauge with capsule element
Model 716.11, measuring system copper alloy
Model 736.11, measuring system stainless steel

for further approvals
see page 2

Applications

- Differential pressure measurement at measuring points with very low differential pressures, for gaseous, dry, clean, oil and grease free media
- Model 736.11 also for aggressive media and environment
- Filter monitoring in ventilation and heating systems
- Filter monitoring in overpressure and clean rooms
- Differential pressure controlled monitoring of ventilator and blast pressures

Special features

- Differential pressure measuring ranges from 0 … 2.5 mbar
- As a standard zero adjustment in front
- Ingress protection IP 66
- Case from stainless steel

Differential pressure gauge model 716.11

Description

Design
For very low differential pressures, DT - GM 87 10 226

Nominal size in mm
Model 716.11: NS 63, 100, 160
Model 736.11: NS 100, 160

Accuracy class
1.6

Scale ranges
Model 716.11: NS 63: 0 ... 16 to 0 ... 400 mbar
NS 100: 0 ... 10 to 0 ... 250 mbar
NS 160: 0 ... 6 to 0 ... 250 mbar
Model 736.11: NS 100: 0 ... 16 to 0 ... 250 mbar
NS 160: 0 ... 2.5 to 0 ... 250 mbar
or all other equivalent vacuum or combined pressure and vacuum ranges

Pressure limitation
Steady: Full scale value
Fluctuating: 0.9 x full scale value

Overpressure safety
Full scale value

Max. working pressure (static pressure)
NS 63: 400 mbar
NS 100, 160: 250 mbar

Permissible temperature
Ambient: -20 ... +60 °C
Medium: +70 °C maximum

Temperature effect
When the temperature of the measuring system deviates from the reference temperature (+20 °C):
max. ±0.5 %/10 K of full scale value

Ingress protection
IP 66 per EN 60529 / IEC 60529

Data sheets showing similar products:
Differential pressure gauges, compact design; model 716.05; see data sheet PM 07.12

Design and operating principle

- Pressure retaining case with capsule measuring element,
  ⊕ pressure is retained in capsule element
  ⊖ pressure is retained in case
- Pressure differential between ⊕ and ⊖ side deflects the capsule element
- The deflection is transmitted to the movement and indicated

Mounting according to affixed symbols,
⊕ high pressure and ⊖ low pressure

Mounting by means of:
- Rigid measuring lines
- Panel or surface mounting flange (option)
- Mounting bracket for wall or pipe mounting (option)

Standard version

Process connection (wetted)
Model 716.11: Copper alloy
Model 736.11: Stainless steel
Lower mount (LM), parallel one behind the other
NS 63: 2 x G ⅛ B (male), 14 mm flats
NS 100, 160: 2 x G ½ B (male), 22 mm flats

Pressure element (wetted)
Model 716.11: Copper alloy
Model 736.11: Stainless steel

Movement (wetted)
Model 716.11: Copper alloy
Model 736.11: Stainless steel

Dial (wetted)
Aluminium, white, black lettering

Pointer (wetted)
Aluminium, black

Zero adjustment (wetted)
Adjusting device for screwdriver in front

Case (wetted)
Stainless steel, pressure retaining,
NS 100, 160: With blow-out device PUR

Window (wetted)
Clear non-splintering plastic

Sealings (wetted)
NBR, silicone

Bezel ring
Cam ring (bayonet type), stainless steel

Options

- Other process connection
- Sealings (model 910.17, see data sheet AC 09.08)
- Panel or surface mounting flange
- Mounting bracket for wall or pipe mounting (data sheet AC 09.07)
- Pressure compensating valve (data sheet AC 09.11) - wetted
- Back mount (BM)
- Overpressure safety
  ⊕ side with scale ranges
  0 ... 2.5 mbar to 0 ... 25 mbar: 3 x full scale value
  ≥ 0 ... 40 mbar: To maximum working pressure
  ⊖ side: On request

Approvals

- **GOST**, metrology/measurement technology, Russia
- **GOST-R**, import certificate, Russia
- **CRN**, safety (e.g. electr. safety, overpressure, ...), Canada

Certificates [1)]

- 2.2 test report per EN 10204 (e.g. state-of-the-art manufacturing, material proof, indication accuracy)
- 3.1 inspection certificate per EN 10204 (e.g. indication accuracy)

1) Option

Approvals and certificates, see website

Dimensions in mm

Standard version

Lower mount (LM)

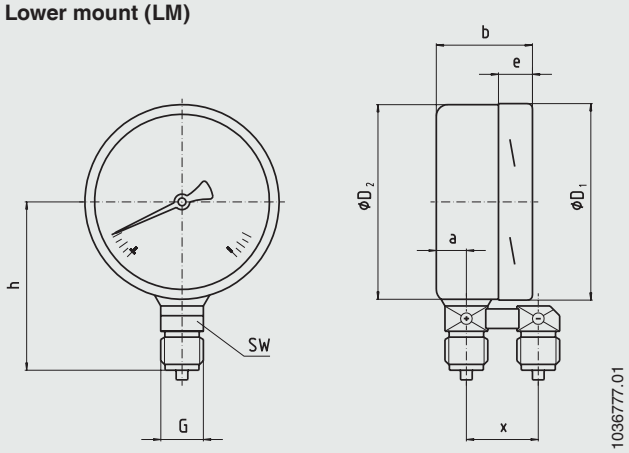

Option

Back mount (BM)

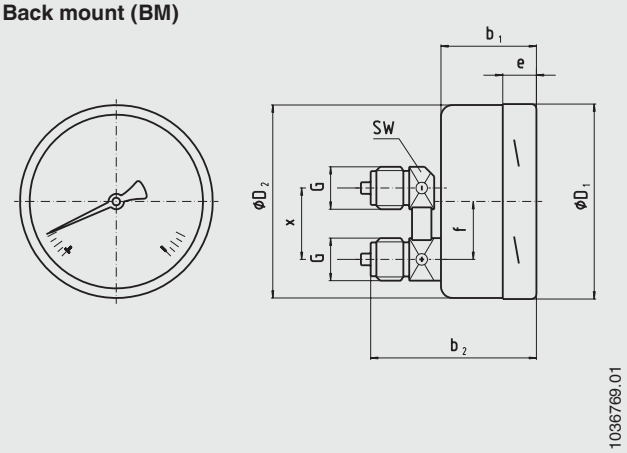

NS	Dimensions in mm												Weight
	a	b	b_1	b_2	D1	D_2	e	f	G	h ±1	X	SW	in kg
63	11	48.5	38	55	64	62	13.5	20	2 x G ⅛ B [1)]	49	23	14	0.23
100	15.5	48.5	49.5	84	101	99	17.5	30	2 x G ½ B	87	37	22	0.73
160	15.5	48.5	51.5	87	161	159	17.5	50	2 x G ½ B	118	37	22	1.33

Process connection per EN 837-3 / 7.3

1) Without spigot

Ordering information

Model / Nominal size / Scale range / Max. working pressure (static pressure) ... mbar / Connection size / Connection location / Options

WIKA Alexander Wiegand SE & Co. KG
Alexander-Wiegand-Straße 30
63911 Klingenberg/Germany
Tel. +49 9372 132-0
Fax +49 9372 132-406
info@wika.de
www.wika.de